Sonus faber

LUMINA

OWNER'S MANUAL

CONTENTS

1 General Information 9
- 1.1 Information for users 9
- 1.2 Warranty and after sales support 9

2 Safety Information 9

3 Installation 10
- 3.1 Unpacking 10
- 3.2 Assembly 11
- 3.3 Positioning the speakers 11
- 3.4 Connections 11
- 3.4.1 Standard connection (single wiring) 12
- 3.4.2 Bi-wiring (stereo system) 12
- 3.4.3 Bi-amping(stereo system) 12
- 3.4.4 Tri-wiring (stereo system) 12
- 3.4.5 Tri-amping (stereo system) 12
- 3.4.6 Multichannel audio systems 12
- 3.4.7 Audio Controls 12
- 3.4.8 Recommendations for choosing the audio amplifier 13

4 Maintenance and Cleaning 13

5 Technical Specifications 32

6 Illustrations 42

EN

1 GENERAL INFORMATION

1.1 INFORMATION FOR USERS

Dear Customer,
We would like to thank and congratulate you for having chosen a Sonus faber loudspeaker system for listening to your favorite Music.
These loudspeakers are designed to immediately meet our customers' highest expectations.
As our aim is to ensure that you obtain the best possible listening experience, it is recommended to read this instruction manual carefully before installation.
Should you have any doubts or enquiries, please contact your sales point's technical staff, the official Sonus faber distributor in your country, or Sonus faber directly by writing to customerservice@sonusfaber.com.
Finally, we highly suggest registering online with the website www.sonusfaber.com in order to keep up to date on all the latest news, initiatives and promotions offered by Sonus faber.

Enjoy your music!

1.2 WARRANTY AND AFTER SALES SUPPORT

The loudspeakers are designed and manufactured according to the highest quality standards. Should however a fault or a malfunction occur, the loudspeakers are covered by warranty, in compliance with the regulations in force in the country where they were purchased.

In such cases, please contact the Sonus faber dealer from whom you purchased your loudspeakers, or the official Sonus faber distributor for your country; the contact information for all the distributors can be found on our website:

- https://www.sonusfaber.com/distributori-store/
- https://www.sonusfaber.com/en/distributors-stores/

The following should also be kept in mind for your convenience:

- The warranty on the loudspeakers covers any manufacturing defects;
- Keep the receipt as proof of purchase to show to the retailer if necessary;
- Keep the loudspeakers' original packaging so that they can be transported without suffering damage if they need to be shipped to an authorized service center;
- The loudspeakers must be accompanied by a description of the malfunction or defect encountered.

The product warranty will be void under the following conditions:

- If the product has been disassembled or modified by persons other than a Sonus faber authorized service center;
- If the product has been used in a manner that is not consistent with the indications contained within this manual.

EN

2 SAFETY INFORMATION

Read this instruction manual and keep it in an accessible location for any needs that may arise.

- When placing the speaker or stand, be sure to completely screw the spikes and to place the speaker on a perfectly stable, solid and level surface.
- Avoid placing heavy objects upon the loudspeaker, as these can compromise its stability.
- If the loudspeakers are to be positioned upon a raised support surface (e.g. mezzanines, wooden boosters, etc.), check beforehand to make sure that the surface can bear the weight. Also make sure that there is enough friction to prevent the loudspeakers from moving due to the vibrations from it generated under normal operating conditions.
- Do not place any objects containing flammable liquids, substances, or liquefiable substances upon the loudspeaker.
- Use one of the connection diagrams contained in this instruction manual. The connection of two or more loudspeakers in parallel can damage your amplifier. If in doubt, contact your dealer.
- Avoid staying near the loudspeakers while the audio system is operating at high volume. This can cause

permanent damage to your hearing. Children must be kept at a safety distance of least 50 cm from the loudspeaker.

- The speakers generate an electromagnetic field that is harmless to humans and pets, but can compromise the proper functionality of electronic equipment, such as CRT monitors or TVs, when placed in close proximity. If this occurs, increase the equipment's distance from the loudspeakers. Do not place credit cards or other similar magnetic stripe cards on the loudspeaker.
- The technology underlying the speakers' functionality is based on the principles of electromagnetism, and the user should therefore avoid operating equipment that generates strong electromagnetic fields, as these could affect the loudspeaker's proper functionality. Avoid placing transmitting devices such as mobile phones, cordless phones, intercom systems etc. on top of the loudspeakers.
- Do not connect the loudspeakers directly to a constant voltage sound distribution system (100 V, 70.7 V or similar). This could result in a serious system overload, with possible damage to the loudspeaker and/or the amplifier.
- Connect the loudspeaker to a PS1 certified source pursuant to the IEC 62368-1 Standard.
- Do not place audio cables and electrical power cables in close proximity to one another. An electromagnetic field is present in the vicinity of the power cables, which can cause an unpleasant humming noise. If this should occur, move the audio cables and electrical power cables away from each other.
- Loudspeaker systems for household use. They must not be used for high volume and continuous sound distribution, as, for example discotheque or sound reinforcement. In this type of application, the involved signal intensity is not compatible with correct operation of the loudspeaker system and can lead to irreversible faults and, in some cases, the start of a fire.

3 INSTALLATION

3.1 UNPACKING

EN

Perform the unpacking operations as indicated by the images in Section 6 (Illustrations).
Respect the following general indications:

- It is advisable to open the packaging as close to the final location as possible.
- Use a proper tool to open the packaging. Do not insert the blade too deep to avoid damaging the contents.
- Keep all the packaging elements for any future transport operations.
- Do not wear any watches, bracelets, rings, etc., in order to avoid scratching the loudspeakers and their finishes. The same care must be taken in order to protect the loudspeakers from any metal elements present on the clothes you are wearing, such as zippers, buttons, belt clasps, rivets, etc.
- Check the content of the packaging (see Section 6 - Technical Specifications). If one or more of the items is missing, notify the dealer where the product was purchased.
- Do not touch the drivers during the operation.

Hold the loudspeaker securely with both hands in order to avoid dropping it. Depending on the weight of the loudspeaker, the indicated operations can be performed more safely and conveniently by two people.

The packaging materials can cause pollution.
These materials must not be disposed of as domestic waste and must be brought to a waste collection and recycling center.

Do not leave the packaging materials within the reach of children!
They could pose a risk of poisoning or suffocation if ingested.

If using a dedicated stand, do not use it with any speaker system other than the one for which it was designed. Improper use of the stand can result in damage or injury.

Some loudspeakers can be fitted with a thread-tensioning mask, to be found in the accessories kit.
Refer to Section 6 (Illustrations) and carefully follow these instructions:

- Insert the pins of the bars of the string grille in the relevant guides, starting from the bottom of the speaker;
- Stretch the elastic bands of the mask until you are able to insert the pins of the mask bars into the relevant guides in the upper part of the speaker;

If you wish to disassemble the string grille, first pull the bar pins out starting from the top of the speaker, then move to the base.

While mounting or removing the thread-tensioning mask as described above, be careful not to damage the front part of the speaker.

3.2 ASSEMBLY

Carefully refer to the drawings in Section 6 (Illustrations).

3.3 POSITIONING THE SPEAKERS

These loudspeakers are designed to be easily inserted within the listening environment. In order to obtain excellent performance, refer to the images in Section 6 (Illustrations).
The conformation of the listening environment and the loudspeakers' positioning can affect the entire audio system's performance.
For example, a room with irregular shape can improve the response within the listening environment, since they limit the formation of standing waves, while a room with a parallelepiped shape is potentially more suitable to generate balanced sound images.
The presence of carpets and curtains positively affect the acoustics of the environment, contributing to the absorption of the first reflections and the lowering of reverberation.
There are no fixed and universally applicable rules for every environment. Nevertheless, a good approach is to start by dividing the listening environment's floor plan, assuming a rectangular shape, into three areas with equal surface.
Referring to the drawing in Section 6 (Illustrations), we suggest to position the loudspeakers on the first line (A) suitably distanced from the side walls, and to position the listening point on the second line (B).
In this way, undesired acoustic effects, deriving from intense first reflections and environmental resonance, which would be generated with loudspeakers positioned in proximity of the walls and corners of the room, are minimized.
The loudspeakers' axis should converge toward the listening position by crossing over top of it, thus creating the "equilateral triangle" stereophonic configuration. This measure, which consists in positioning the loudspeakers in such a way as to literally point them towards the listener's ears, allows significant improvement in the focus of the stereophonic image.
Given that the illustrated procedure, which is aimed at creating almost perfect listening conditions, cannot be applied by all of our customers due to objective problems linked to the organization of the living environment, it is recommended to position the two loudspeakers away from the corners of the room, and at a distance of at least 1 m from the back wall. The two loudspeakers should be at least 1.8 meters apart from each other.
The listening point should be at a height of approximately 1.1 meters off the ground.
The distance between the loudspeakers themselves, and between the loudspeakers and the listening point, can be subsequently adjusted as desired.
If the loudspeakers are to be positioned on a shelf, distancing is at least one and a half meters and surfaces at equal height is recommended.

3.4 CONNECTIONS

After the loudspeakers have been positioned, they can be connected. Refer to the images in section 6.

The connections must be made with the equipment turned off!

EN

The loudspeaker connection terminals allow you to connect cables terminated with stripped cable, forks or banana plugs.
Loudspeaker systems with bi- or tri-wiring connection are equipped with jumpers that allow you to implement various connection schemes. Depending on which scheme you intend to adopt, these jumpers may have to be removed.
Proper tightening and periodic verification of the terminals will help to obtain and maintain optimal performance.

3.4.1 STANDARD CONNECTION (SINGLE WIRING)

It consists in running the loudspeakers (usually a pair) with a single stereo amplifier, or with a pair of monophonic amplifiers, using only one bipolar power cable for each channel. Complete the connection as shown in the relative illustration.

3.4.2 BI-WIRING CONNECTION (ONLY FOR LOUDSPEAKERS EQUIPPED WITH SEPARATE INPUTS FOR LOW AND MEDIUM-HIGH FREQUENCIES).

This scheme allows the bipolar power cables, to be connected to the Low sections and the Medium-high sections of the loudspeakers, to be differentiated. It consists in running the loudspeakers (usually a pair) with a single stereo amplifier, or with a pair of monophonic amplifiers, using separate bipolar power cables for each input section of the loudspeaker. Remove the jumpers and complete the connection as shown in the relative illustration.

3.4.3 BI-AMPING CONNECTION (ONLY FOR LOUDSPEAKERS EQUIPPED WITH SEPARATE INPUTS FOR LOW AND MEDIUM-HIGH FREQUENCIES).

This scheme is an evolution of the Bi-wiring connection and also allows the amplifiers to be connected to the Low sections and the Medium-high sections of the loudspeakers to be differentiated. Loudspeakers (usually a pair) are run with two distinct stereo amplifiers, or with two pairs of monophonic amplifiers, using separate bipolar power cables for each input section of the loudspeaker. Remove the jumpers and complete the connection as shown in the relative illustration.

EN

3.4.4 TRI-WIRING CONNECTION (ONLY FOR LOUDSPEAKERS EQUIPPED WITH SEPARATE INPUTS FOR INFRA-LOW AND MEDIUM-HIGH FREQUENCIES).

This connection scheme is an extension of the Bi-wiring scheme for loudspeakers with three separable input sections. It consists in running the loudspeakers (usually a pair) with a single stereo amplifier, or with a pair of monophonic amplifiers, using separate bipolar power cables for each input section of the loudspeaker. Remove the jumpers and complete the connection as shown in the relative illustration. By keeping the jumpers between two pairs of input terminals (normally medium-low and medium-high), it is however possible to implement a bi-wiring scheme).

3.4.5 TRI-AMPING CONNECTION (ONLY FOR LOUDSPEAKERS EQUIPPED WITH SEPARATE INPUTS FOR INFRA-LOW, MEDIUM-LOW AND MEDIUM-HIGH FREQUENCIES).

This connection scheme is an extension of the Bi-amping scheme for loudspeakers with three separable input sections. Loudspeakers (usually a pair) are run with three distinct stereo amplifiers, or with three pairs of monophonic amplifiers, using separate bipolar power cables for each input section of the loudspeaker. Remove the jumpers and complete the connection as shown in the relative illustration. By keeping the jumpers between two pairs of input terminals (normally medium-low and medium-high), it is however possible to implement a bi-amping scheme).

3.4.6 MULTI-CHANNEL AUDIO SYSTEMS

The above also applies similarly in the case of multi-channel systems. Obviously, the connection scheme becomes quite complex as the number of amplifiers increases with the number of channels.

3.4.7 AUDIO CONTROLS

Top range loudspeakers give the user the possibility to adjust the acoustic output at low and/or high frequencies. The extent of the recommended adjustment depends on the taste of the listener and on the specific peculiarities of the environment, i.e. the absorption of the room and the diffusion of the low frequency sound components.

With the audio controls in certain positions, the overall impedance of the loudspeaker may decrease at certain frequencies. It is therefore always recommended to use high quality cables (low resistance and low reactance per linear metre) and power amplifiers with high output current.

3.4.8 RECOMMENDATIONS FOR CHOOSING THE AUDIO AMPLIFIER

The output power required by amplifier in average conditions depends on the features of the loudspeaker system (nominal impedance and sensitivity) and listening conditions (average acoustic level and listening point). The following table, as an example, shows the case of a loudspeaker with a 4-ohm nominal impedance and a sensitivity of 92 dB SPL.

Listening distance	Required amplifier required output power (min. Pavg per channel*)	Corresponding audio signal strength (per channel *)
2 m	40 W	0.8 W
2.5 m	63 W	1.3 W
3 m	90 W	1.8 W
3.5 m	125 W	2.3 W
* for an average volume level at a listening distance equal to 82 dBSPL, music signal with 20 dB crest factor		

Sound programs with higher crest factors require power amplifiers with a higher headroom of output voltage, while the average power of the audio signal normally remains fairly low. The choice of amplifiers should therefore be made taking into account not so much the value of the average power supplied for low listening levels but, above all, the management of those very short moments in which the musical signal reaches extraordinarily high peaks.

EN

4 MAINTENANCE AND CLEANING

The loudspeakers do not require any particular maintenance operations, just general periodic cleaning. In order to preserve the loudspeakers' finish, cover them with the supplied fabric dust-protection sheet, especially if the loudspeakers are not expected to be used for an extended period of time.

Risk of damage to the loudspeaker's cabinet!
Do not use cleaning products, furniture wax, liquid detergents, or alcohol.
Do not use rough cloths.

Do not use products like waxes or detergents to clean the wood parts, as these could stain or damage the wood or the loudspeakers themselves. It is recommended to use a soft cloth (e.g. microfiber, like that supplied), and moisten it slightly with the liquid supplied in the cleaning kit, if necessary. Wood is a natural living material that can be affected by the environmental conditions. We recommend positioning the loudspeakers away from heat sources or windows, above all during the summer months. Avoid exposing the loudspeakers to direct sunlight.
It is recommended to use a soft brush to eliminate any dust that may have accumulated on the cabinet, the front panels, and the loudspeakers themselves, taking care not to damage the loudspeakers' delicate membranes.
It is recommended to use a cloth dampened in water or common liquid neutral detergents with low alkaline content to clean the marble parts of the base of the speaker and the base of the stand (where present).
It is recommended to use the supplied cloth and liquid to clean the metal and glass surfaces (where present). Do not use aggressive strong chemical products such as acetone, trichloroethylene, acids, abrasive agents, strong de-greasers, alcohol, lemon or wine.
Other specific suggestions and instructions are provided in Section 6 (Illustrations).

These measures will help you to keep your loudspeakers' working perfectly for years to come. Time will help improve the sound by breaking in the speakers' moving parts (membranes and suspensions), and the acoustic chamber will become accustomed to music being played the more it is used - much like what happens with acoustic string instruments!

5 TECHNICAL SPECIFICATIONS

LUMINA I

System	2-way shelf loudspeaker system. Vented box design.
Drivers	**Tweeter**: 29mm high definition DAD™ driver. Visco-elastically baffle decoupling. Sonus faber design. **Midwoofer**: 120mm cone driver. Ultra-free compression basket, Sonus faber design. Special custom diaphragm made with a blend of traditional cellulose pulp and other natural fibers, developed according to the most natural sound. Ultra-dynamic performance and high linearity. Sonus faber design.
Crossover	Optimized amplitude/phase response for optimal space/time performance. Crossover frequency: 2000 Hz.
Frequency response	65 Hz -24.000 Hz
Sensitivity	84dB SPL (2.83V/1m)
Nominal impedance	4 ohm
Suggested amplifier power output	30W – 100W undistorted signal
Dimensions (HxWxD)	280 x 148 x 213 mm / 11 x 5.8 x 8.4 in
Weight (each)	4.4 Kg / 9.7 lb
Packaging Content	1 Manual 2 Jumpers 2 Grilles 2 Fabric dust guards

LUMINA II

System	2-way shelf loudspeaker system. Vented box design.
Drivers	**Tweeter**: 29mm high definition DAD™ driver. Visco-elastically baffle decoupling. Sonus faber design. **Midrange:** 150mm cone driver. Ultra-free compression basket, Sonus faber design. Special custom diaphragm made with a blend of traditional cellulose pulp and other natural fibers, developed according to the most natural sound. Ultra-dynamic performance and high linearity. Sonus faber design.
Crossover	Optimized amplitude/phase response for optimal space/time performance. Crossover frequency: 1800 Hz.
Frequency response	55 Hz -24.000 Hz
Sensitivity	86dB SPL (2.83V/1m)
Nominal impedance	4 ohm
Suggested amplifier power output	30W – 150W undistorted signal
Dimensions (HxWxD)	304 x 180 x 263 mm / 12 x 7,1 x 10,3 in
Weight (each)	5.65Kg / 12,5 lb
Packaging Content	1 Manual 2 Jumpers 2 Grilles 2 Fabric dust guards

LUMINA III

System	3-way floorstanding loudspeaker system. Vented box design.
Drivers	**Tweeter**: 29mm high definition DAD™ driver. Visco-elastically baffle decoupling. Sonus faber design. **Midrange:** 150mm cone driver. Ultra-free compression basket, Sonus faber design. Special custom diaphragm made with a blend of traditional cellulose pulp and other natural fibers, developed according to the most natural sound. Ultra-dynamic performance and high linearity. Sonus faber design. **Woofer:** 2x150mm cone drivers. Ultra-free compression basket, Sonus faber design. Special custom diaphragm made with a blend of traditional cellulose pulp and other natural fibers, developed according to the most natural sound. Ultra-dynamic performance and high linearity. Sonus faber design.
Crossover	Optimized amplitude/phase response for optimal space/time performance "Para-cross topology". Crossover frequencies: 350 and 3500 Hz.
Frequency response	40 Hz – 24.000 Hz
Sensitivity	89dB SPL (2.83V/1m)
Nominal impedance	4 ohm
Suggested amplifier power output	50W – 250W undistorted signal
Dimensions (HxWxD)	989 x 228 x 277,7 mm / 38,9 x 9 x 10,9 in
Weight (each)	15.9 Kg / 35.1 lb
Packaging Content	1 Manual 2 Jumpers 2 Grilles 2 Fabric dust guards 4 Spikes 4 Under spikes 4 Spikes locks

LUMINA V

System	3-way floorstanding loudspeaker system. Vented box design
Drivers	**Tweeter**: 29mm high definition DAD™ driver. Visco-elastically baffle decoupling. Sonus faber design. **Midrange:** 150mm cone driver. Ultra-free compression basket, Sonus faber design. Special custom diaphragm made with a blend of traditional cellulose pulp and other natural fibers, developed according to the most natural sound. Ultra-dynamic performance and high linearity. Sonus faber design. **Woofer:** 2x165mm cone drivers. Ultra-free compression basket, Sonus faber design. Special custom sandwich diaphragm made with a blend of traditional cellulose pulp and other natural fibers, developed according to the most natural sound. Ultra-dynamic performance and high linearity. Sonus faber design.
Crossover	Optimized amplitude/phase response for optimal space/time performance "Hybrid IFF-Para-cross solution". Crossover frequencies: 260 and 2600 Hz.
Frequency response	38 Hz – 24.000 Hz
Sensitivity	90dB SPL (2.83V/1m)
Nominal impedance	4 ohm
Suggested amplifier power output	50 – 300W undistorted signal
Dimensions (HxWxD)	1049 x 280 x 372,6 mm / 4,13 x 11 x 14,7 in
Weight (each)	22.5 Kg / 49,6 lb
Packaging Content	1 Manual 2 Jumpers 2 Grilles 2 Fabric dust guards 4 Spikes 4 Under spikes 4 Spikes locks

LUMINA CENTER I

System	2-way horizontal loudspeaker system. Vented box design.
Drivers	**Tweeter**: 29mm high definition DAD™ driver. Visco-elastically baffle decoupling. Sonus faber design. **Midwoofer**: 2 x 120mm cone drivers. Ultra-free compression basket, custom Sonus faber design. Special custom diaphragm made with a blend of traditional cellulose pulp and other natural fibers, developed according to the most natural sound. Ultra-dynamic performance and high linearity. Sonus faber design.
Crossover	Optimized amplitude/phase response for optimal space/time performance. Crossover frequency: 2000 Hz.
Frequency response	65 Hz -24.000 Hz
Sensitivity	87dB SPL (2.83V/1m)
Nominal impedance	4 ohm
Suggested amplifier power output	30W – 100W undistorted signal
Dimensions (HxWxD)	168,6 x 523,6 x 212,7 mm / 6,6 x 20,6 x 8,4 in
Weight	7.6 Kg each / 16.8 lb each
Packaging Content	1 Manual 2 Jumpers 1 Grilles 1 Fabric dust guards

6 ILLUSTRAZIONI / ILLUSTRATIONS ABBILDUNGEN / ILLUSTRATIONS / ВСПОМОГАТЕЛЬНЫЕ ЧЕРТЕЖИ

1

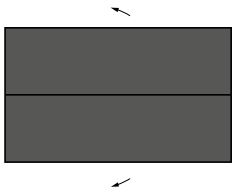

A

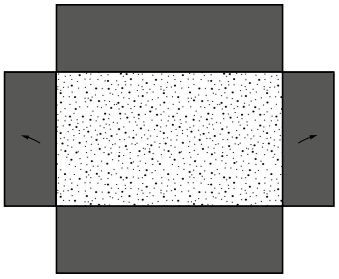

B

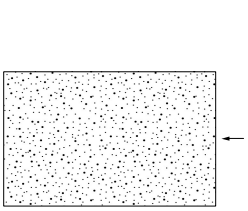

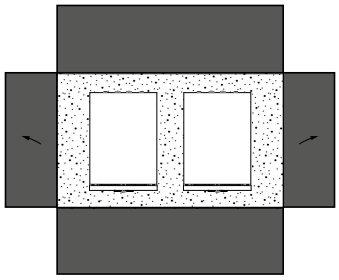

C

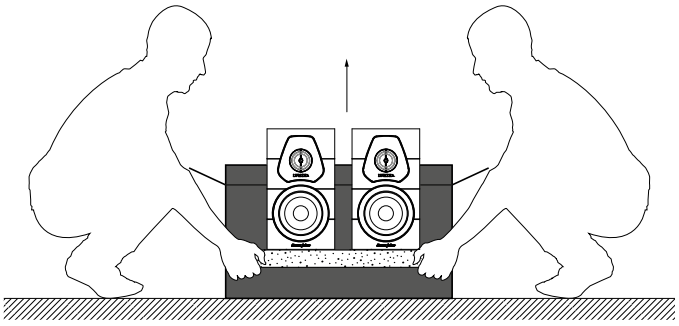

D

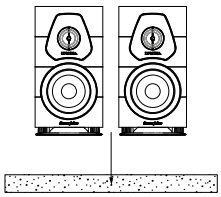

E

2

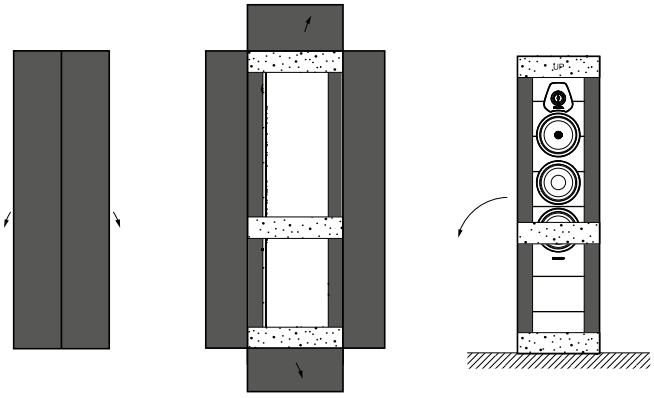

A B C

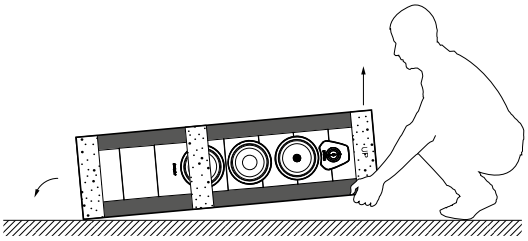

D

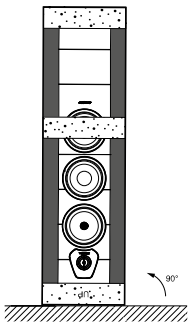

E

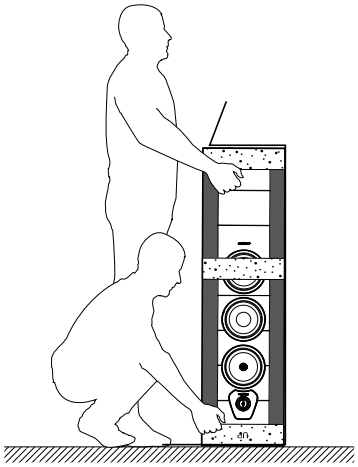

F

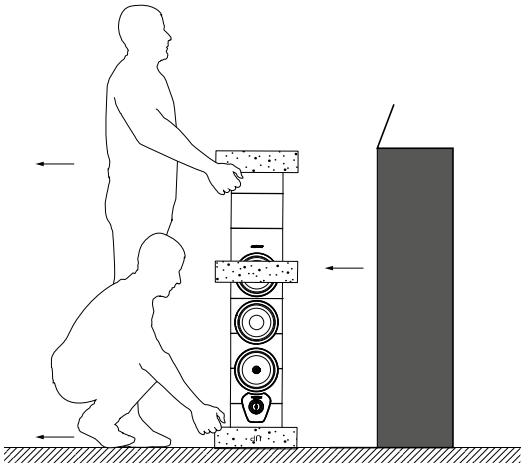

G

3

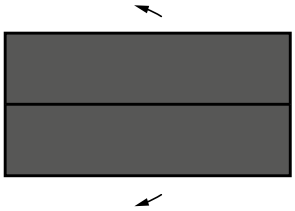

A

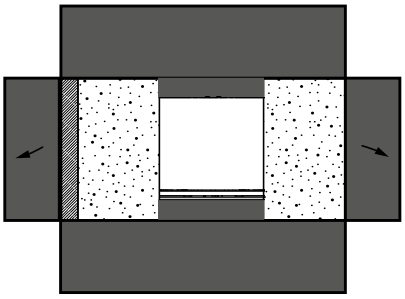

B

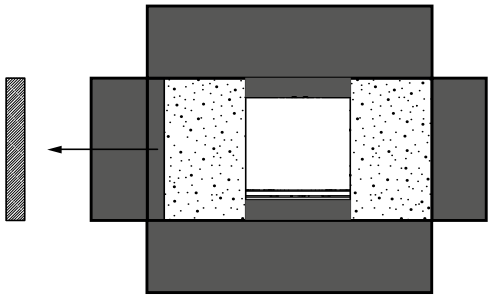

C

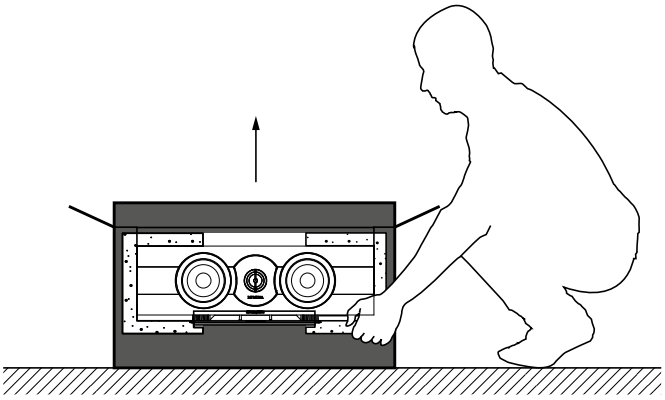

D

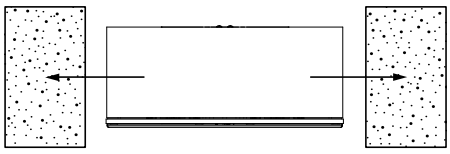

E

4

5

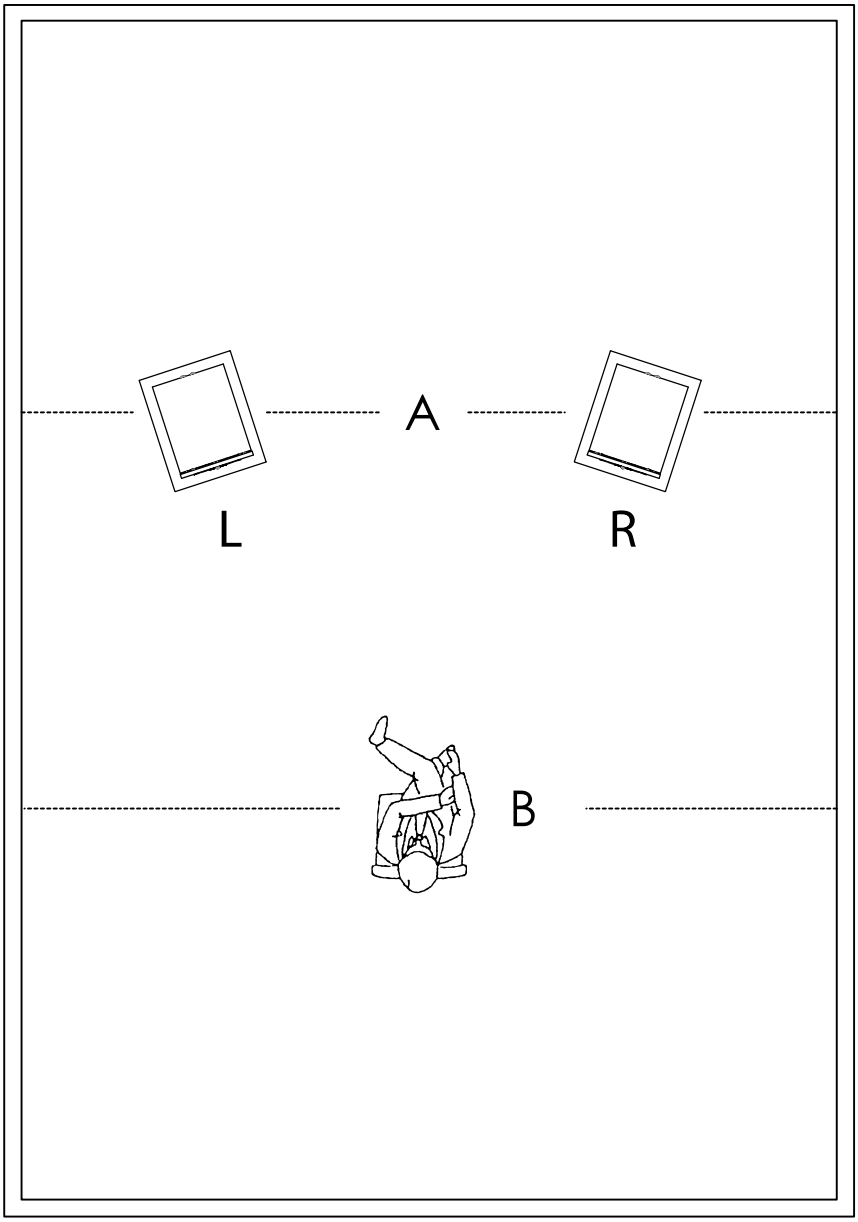

6

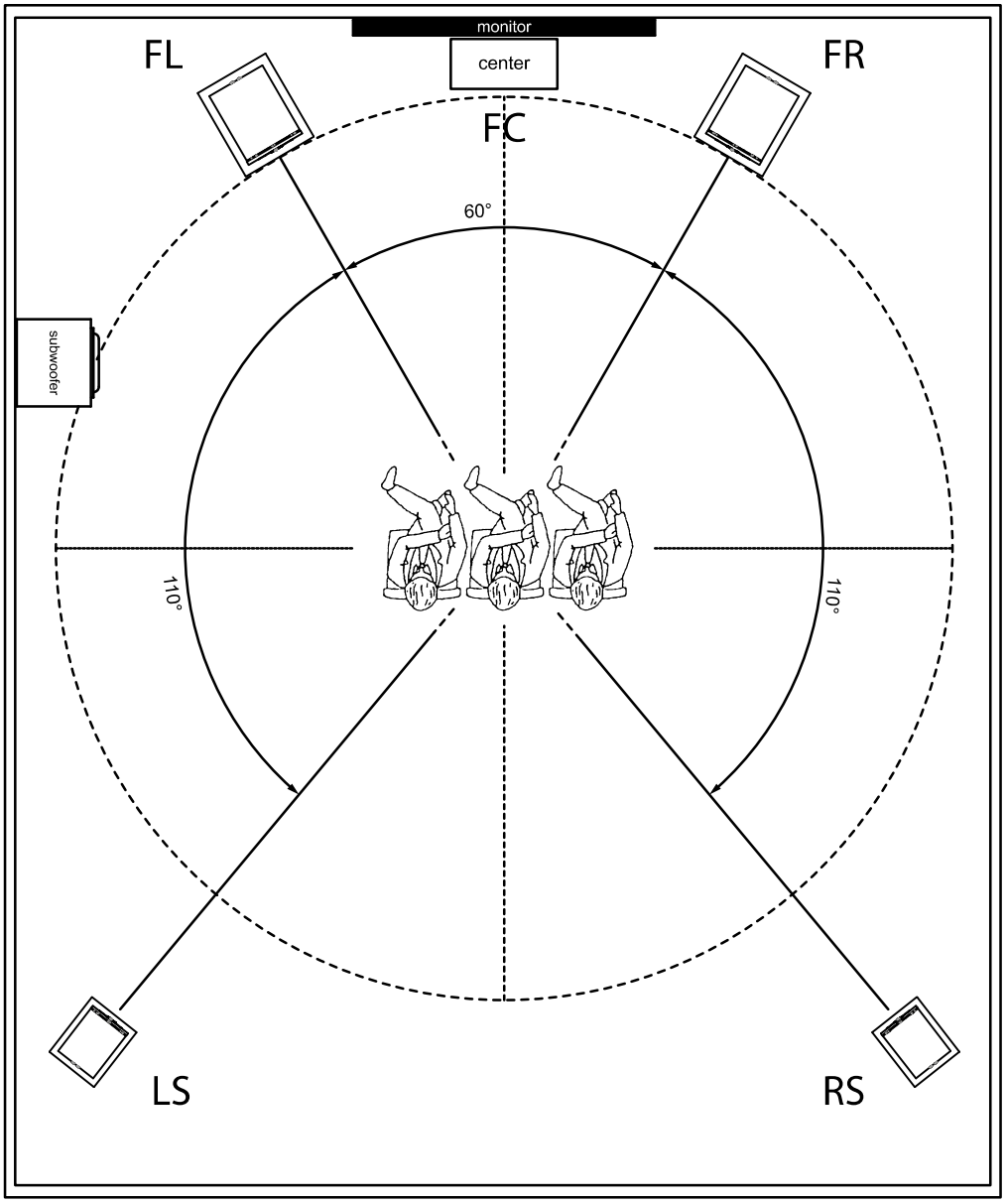

7

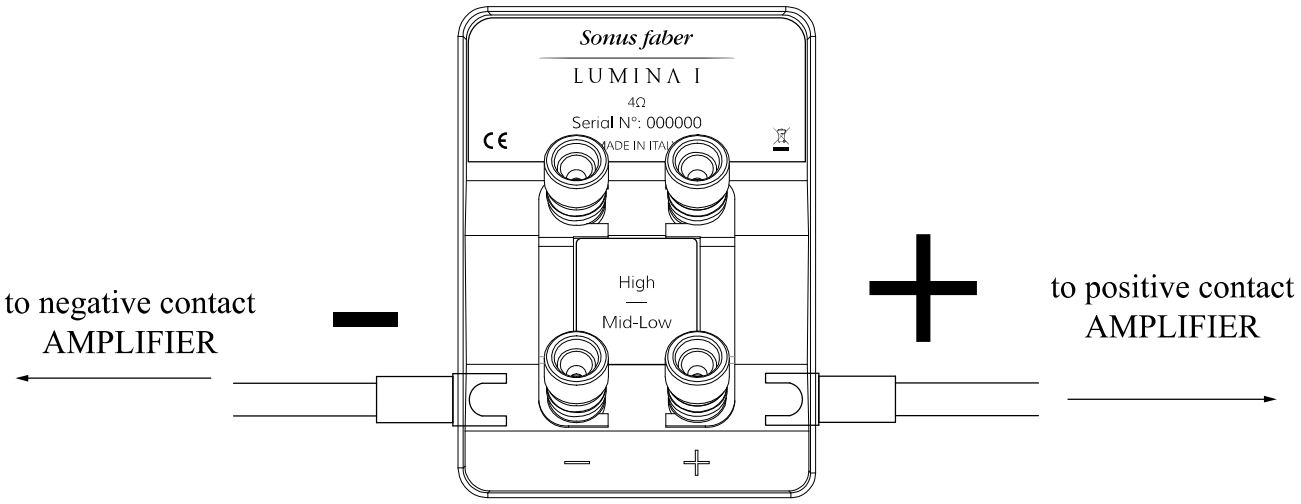
Sonus faber
LUMINA I
4Ω
Serial N°: 000000
High
Mid-Low
to negative contact
AMPLIFIER
to positive contact
AMPLIFIER

8

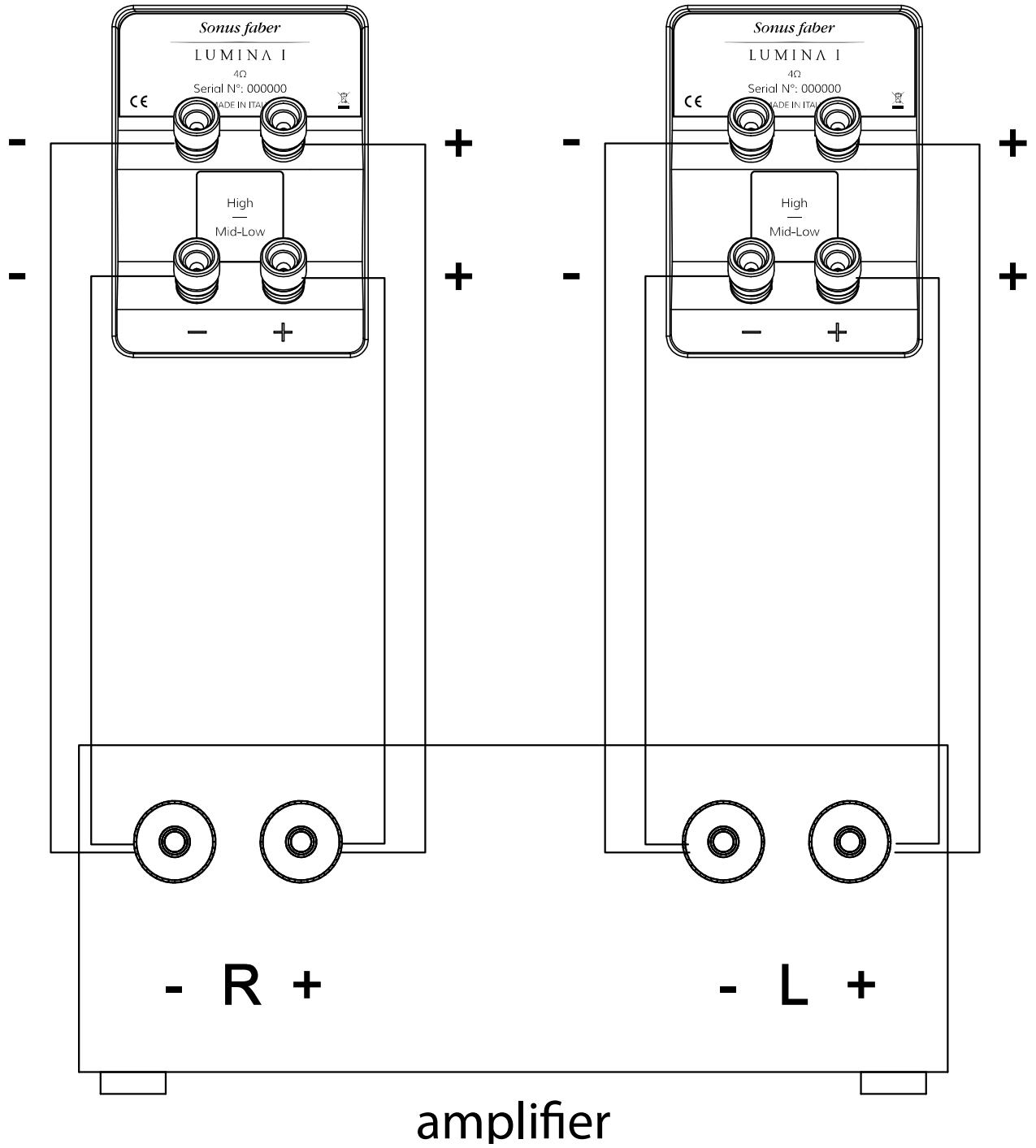
Sonus faber
LUMINA I
4Ω
Serial N°: 000000
High
Mid-Low
Sonus faber
LUMINA I
4Ω
Serial N°: 000000
High
Mid-Low
- R +
- L +
amplifier

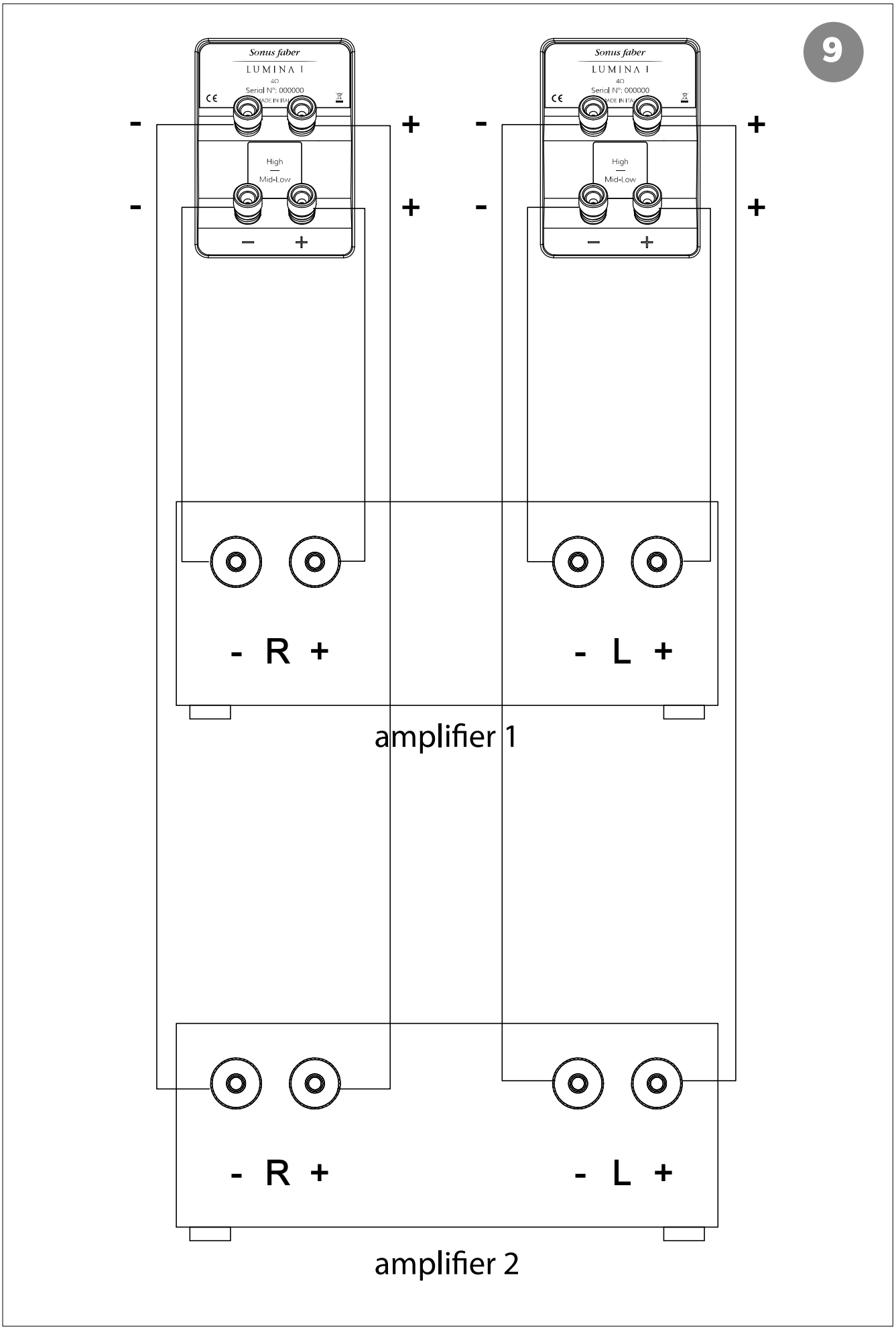
9
Sonus faber
LUMINA I
4Ω
Serial N°: 000000
MADE IN ITALY
High
Mid-Low
- +
- +
- +
- +
- R +
- L +
amplifier 1
- R +
- L +
amplifier 2

NOTE

Sonus faber S.p.A.
Via Meucci, 10 - 36057 Arcugnano (VI) - Italy
Tel. 0444/288788 - fax 0444/288722
info@sonusfaber.com

© *COPYRIGHT* 2020
World copyright
reserved

Sonus faber reserves the right to change any technical and/or aesthetical feature of its products at any time without any previous notice